D-SUB VERTICAL STAMPED PIN FOR EMI

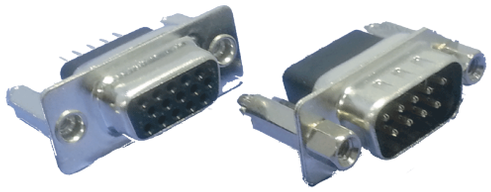

ORDER

456–09–P–1–N–S–N–A–A–N–□–R

- Series: 456
- Pins: 09
- Contact Type: P
- Housing Color: 1
- Shell Plating: N
- Contact Plating: S
- Screw Type: N
- Mounting Method: A
- Accessories: A
- Filter: N
  - W: With Filter
  - N: W/O Filter
- Special code: □
- RoHS: R

456

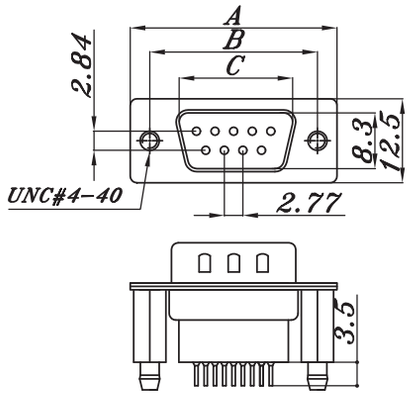

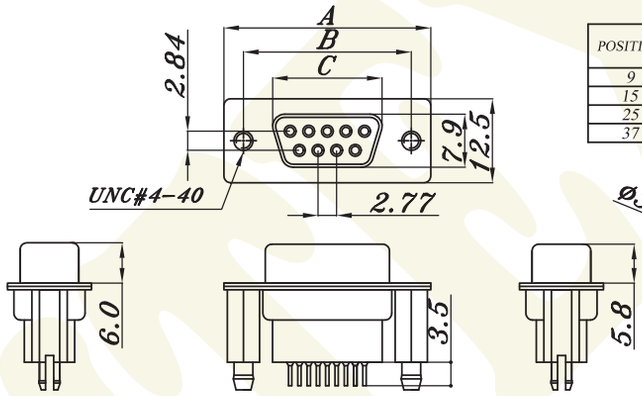

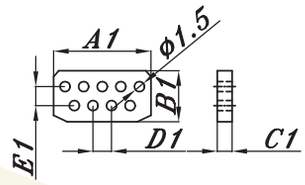

EMI FILTER DIMENSION

POSITION	A1	B1	C1	D1	E1	MIN.IMPEDANCE (OHM)	
						25MHz	100MHz
9	14.5	7.6	2.2	2.77	2.29	20	50
15	22.7	7.6	2.2	2.77	2.29	20	50
25	36.4	7.6	2.2	2.77	2.29	20	50
37	53.1	7.6	2.2	2.77	2.29	20	50

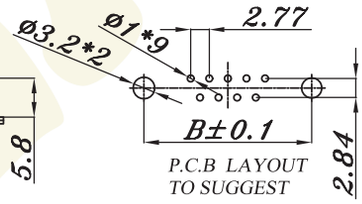

D-SUB VERTICAL H/D STAMPED PIN FOR EMI

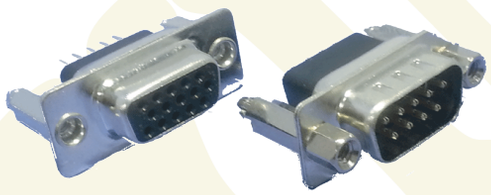

ORDER

456H–15–P–1–N–S–N–A–A–N–□–R

- Series: 456H
- Pins: 15
- Contact Type: P
- Housing Color: 1
- Shell Plating: N
- Contact Plating: S
- Screw Type: N
- Mounting Method: A
- Accessories: A
- Filter: N
  - W: With Filter
  - N: W/O Filter
- Special code: □
- RoHS: R

456H

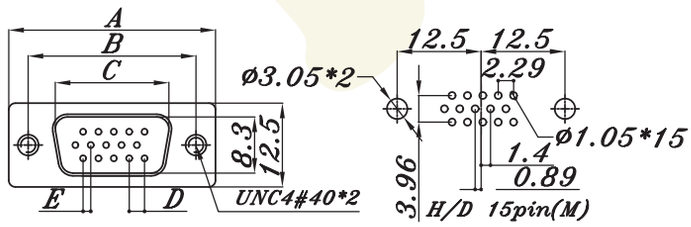

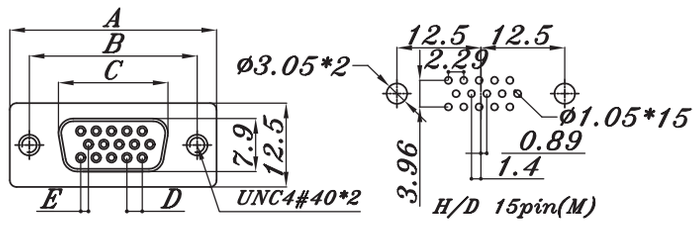

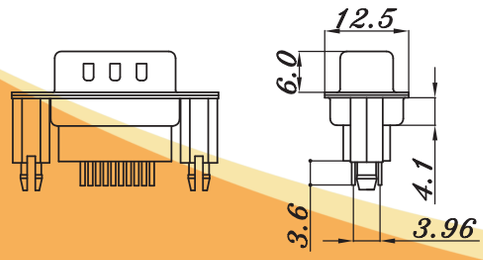

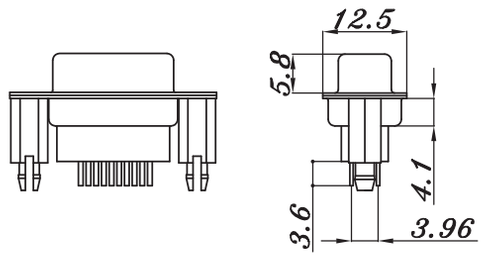

YIMTEX®