Pitch:1.25mm Disconnectable Crimp Type For PCB&Wire

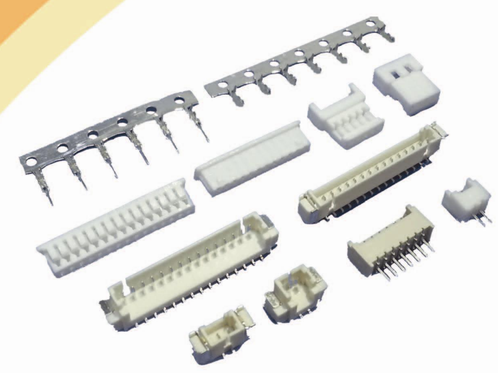

MATERIAL
Insulator:Thermoplastics
UL94V-0 or UL94V-2
Contact:Copper Alloy
Contact Plated:Tin or Gold over Nickel

SPECIFICATIONS
Voltage Rating:125V AC,DC
Current Rating:1A AC,DC
Withstanding Voltage:250V AC/minute
Contact Resistance:20mΩ Max.
Insulation Resistance:100MΩ Min.
Temperature Range:-25°C~+85°C

ORDER INFORMATION

Series No.	Pins	Mounting Type	Contact Plated	SMD Type	Special code	RoHS
		S	T			R
		S:Straight Type R:Right Angle	T:Tin	V:SMD S/T R:SMD R/A		

*Special Options Contact Our Sales Team.

501MW Wafer Straight Type

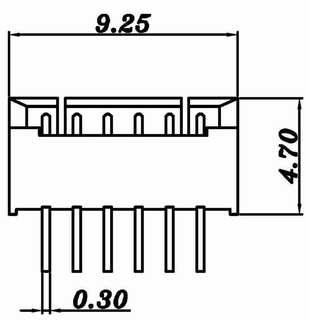

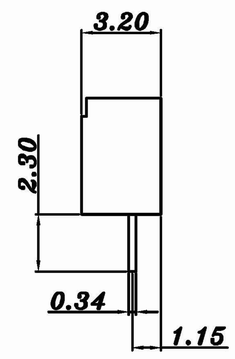

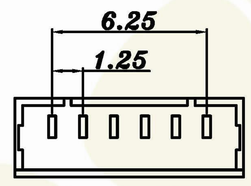

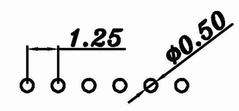

P.C.B LAYOUT

PINS
2-18

501MW Wafer Right Angle

501

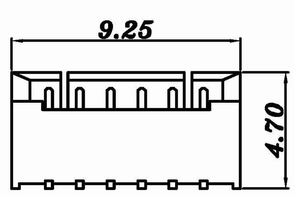

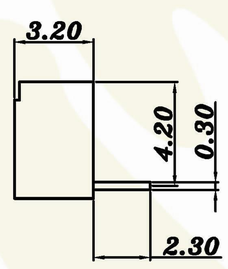

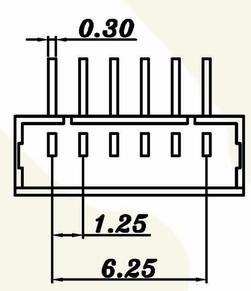

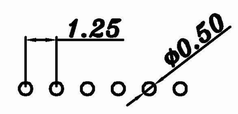

P.C.B LAYOUT

PINS
2-18

501MW Wafer SMD Straight Type

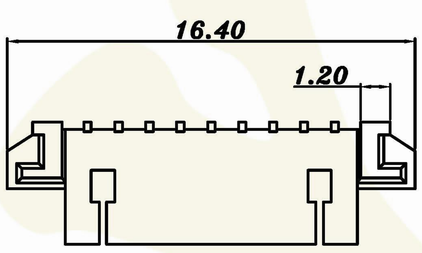

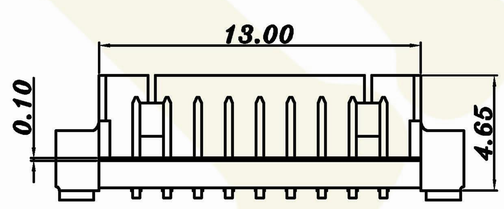

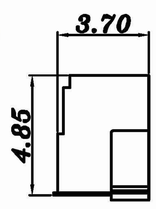

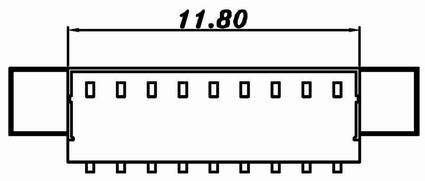

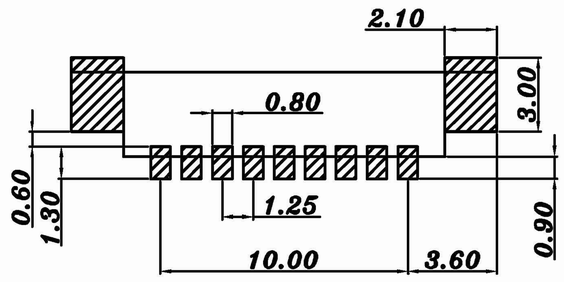

P.C.B LAYOUT

PINS
2-15

501MW Wafer SMD Right Angle

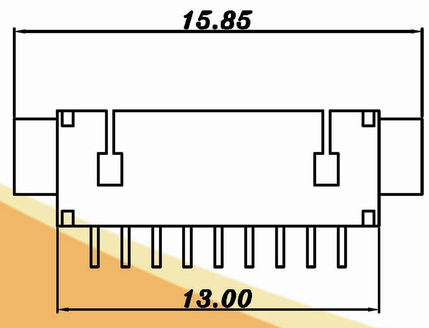

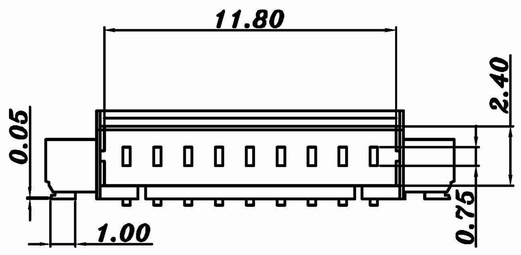

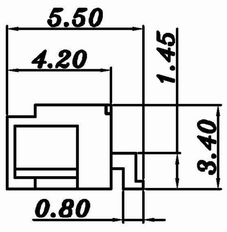

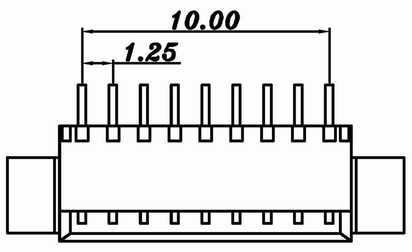

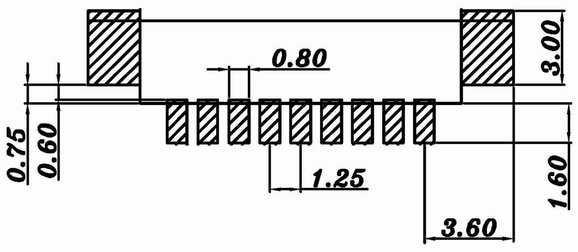

P.C.B LAYOUT

PINS
2-15

YIMTEX®

501MH/501MT Housing/Terminal

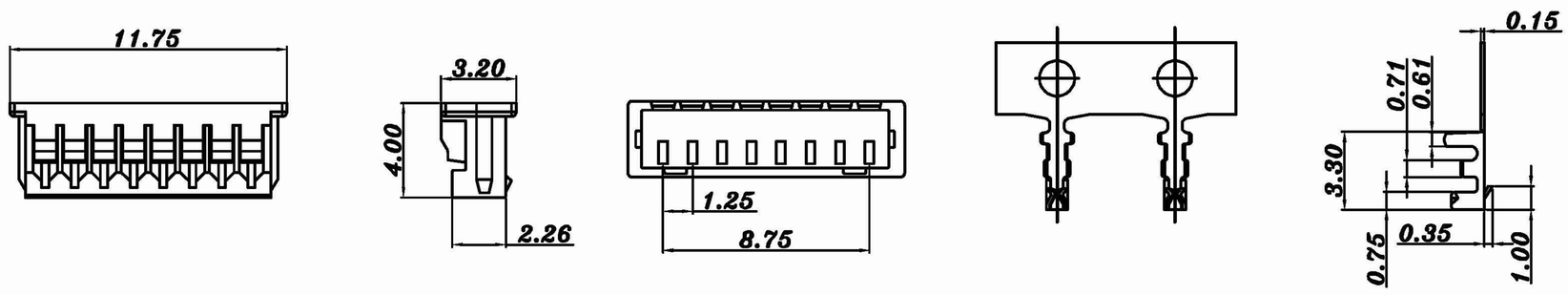

PINS
2–18

Contact Plated	Unit
Tin	Per Reel

501MMH/501MMT Housing/Terminal

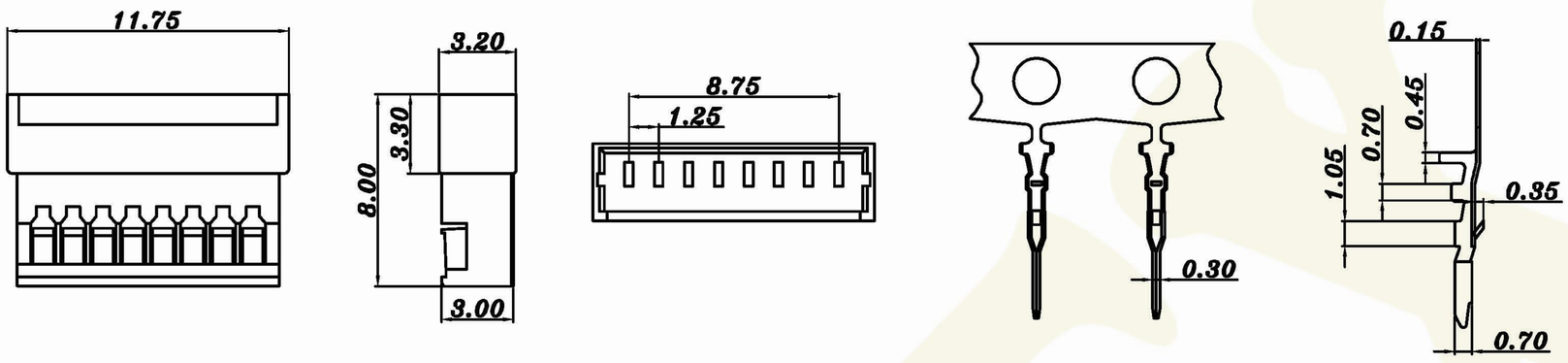

PINS
2–20

Contact Plated	Unit
Tin	Per Reel

Pitch:1.25mm Disconnectable Crimp Type For PCB&Wire

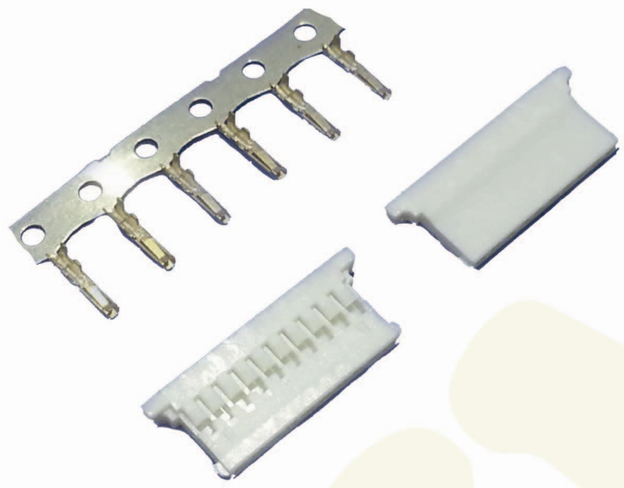

MATERIAL
Insulator:Thermoplastics
UL94V–0 or UL94V–2
Contact:Copper Alloy
Contact Plated:Tin or Gold over Nickel

SPECIFICATIONS
Voltage Rating:125V AC,DC
Current Rating:1A AC,DC
Withstanding Voltage:500V AC/minute
Contact Resistance:20mΩ Max.
Insulation Resistance:100MΩ Min.
Temperature Range:–25°C~+85°C

501

ORDER INFORMATION

Series No.	Pins	Contact Plated	Special code	RoHS
		T		R

T:Tin

*Special Options Contact Our Sales Team.

501MHA Housing

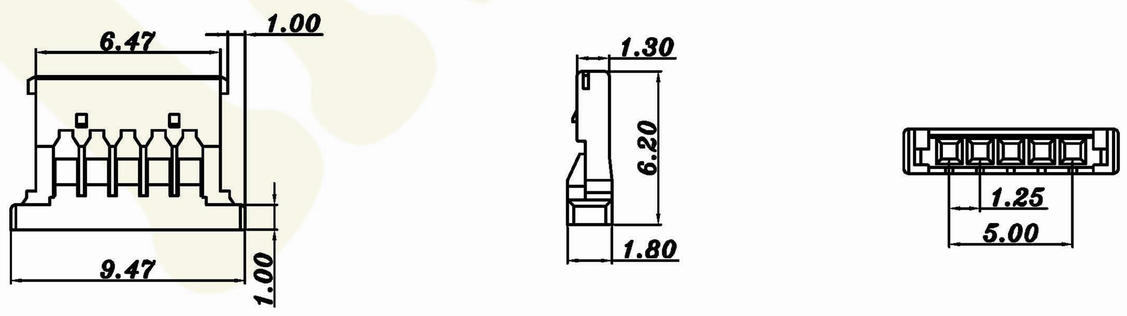

PINS
2–30

501MTA Terminal

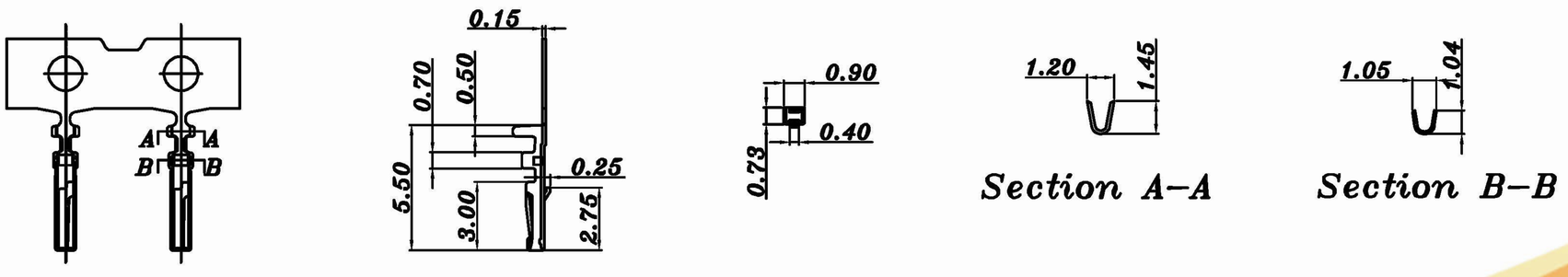

Contact Plated	Unit
Gold Flash	Per Reel

YIMTEX®